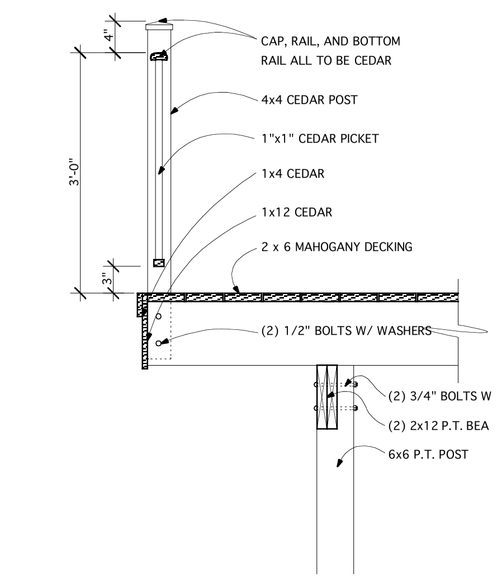

4 A4 DECK DETAIL
SCALE 3/4"= 1'0"

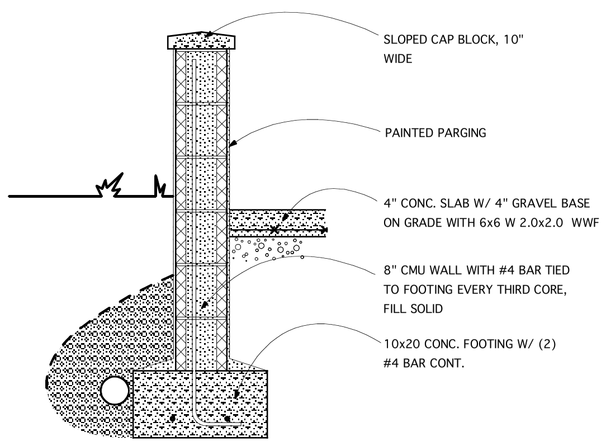

5 A4 RETAINING WALL SECTION
SCALE 3/4"= 1'0"

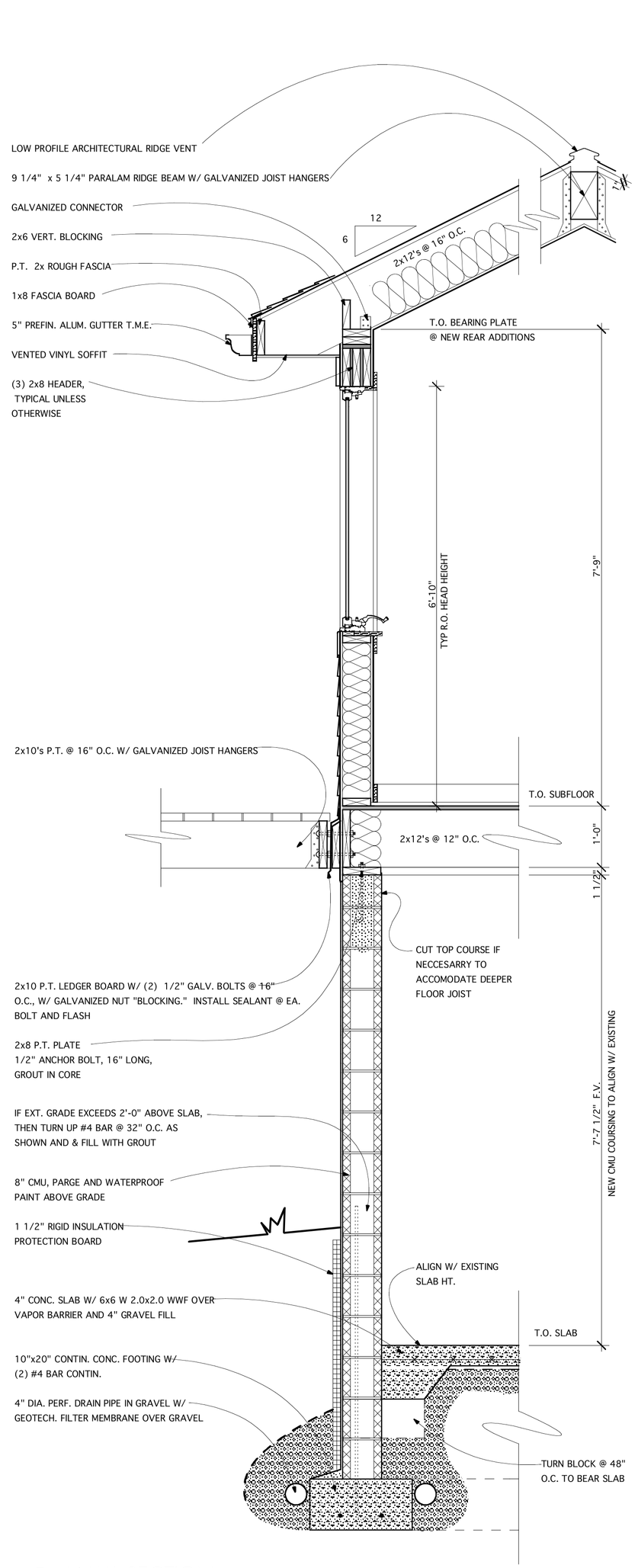

1 A4 WALL SECTION
SCALE 3/4"= 1'0"

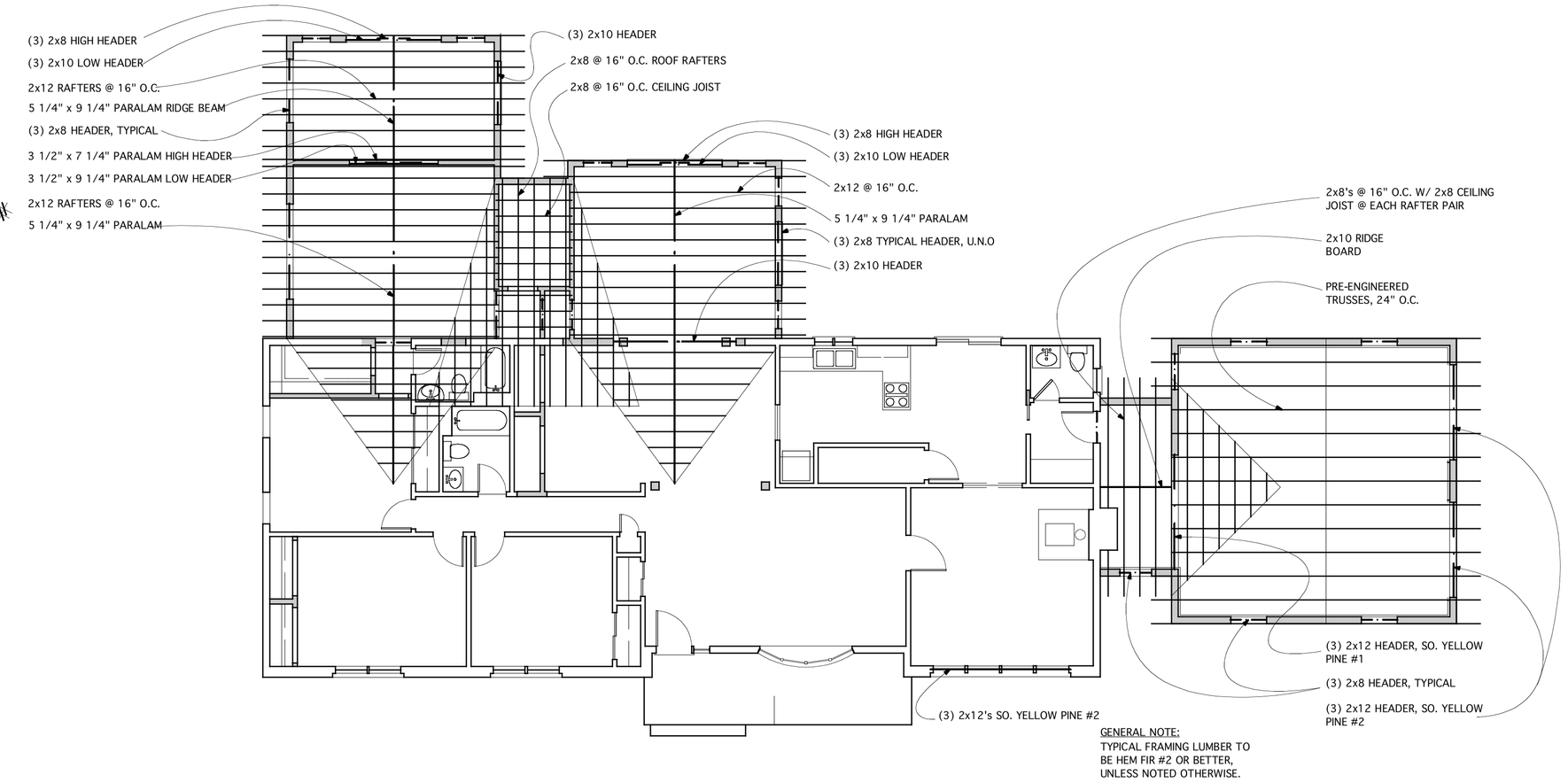

GENERAL NOTE:
TYPICAL FRAMING LUMBER TO BE HEM FIR #2 OR BETTER, UNLESS NOTED OTHERWISE.

2 A4 ROOF FRAMING PLAN
SCALE 1/8"= 1'0"

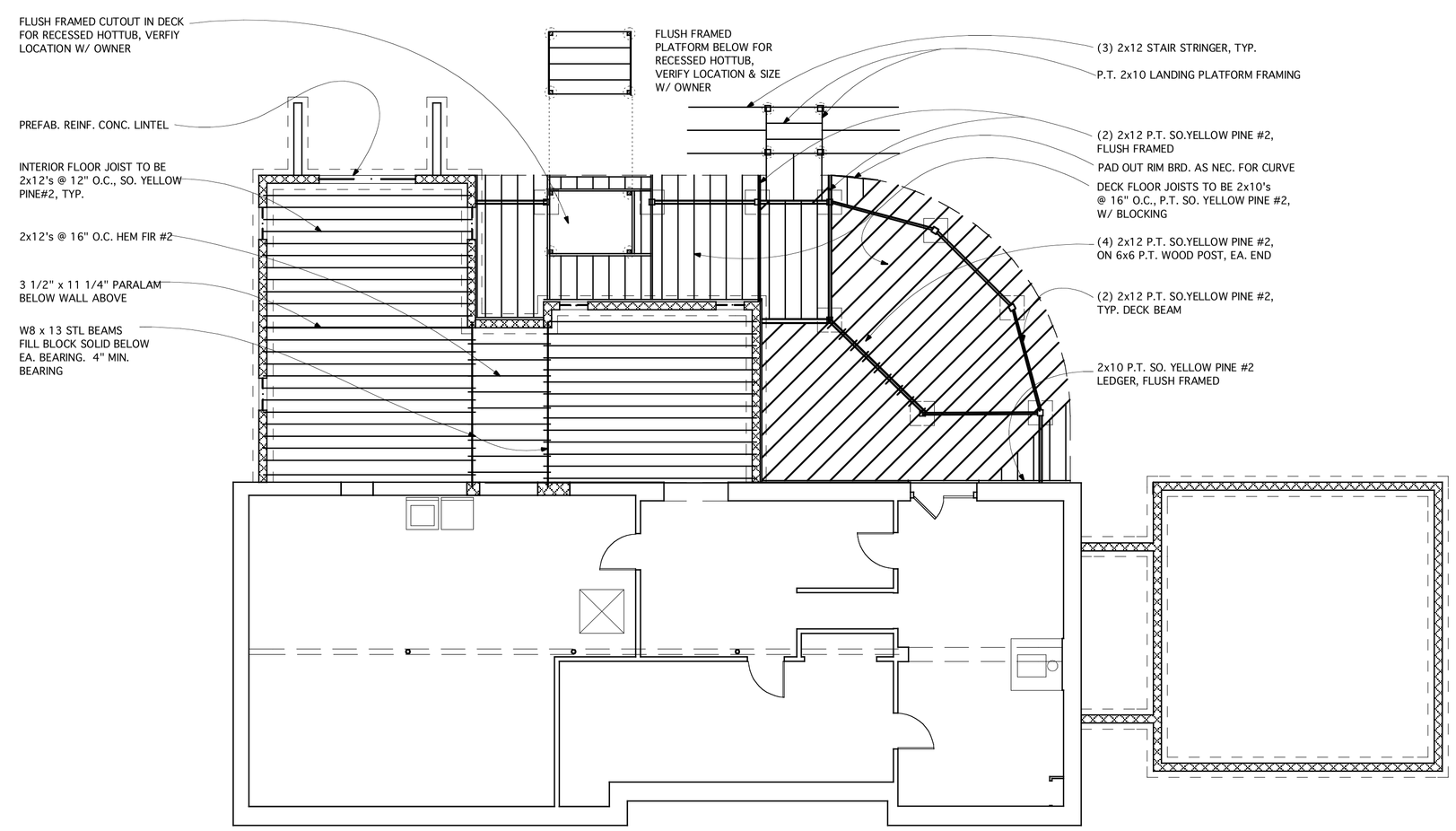

3 A4 FLOOR FRAMING PLAN
SCALE 1/8"= 1'0"

Skarda and Associates
Structural Consultants, Inc.
2439 N. Charles Street
Baltimore, Maryland 21218
(410)-366-9384
(410)-366-9389 Fax #

Melville Thomas Mobley
ARCHITECTS, INC
600 Wyndhurst Ave ■ SUITE 245 ■ Baltimore, MD 21210
TEL: 410.433.4400 FAX: 410.433.4719
E-MAIL: TMArch@charm.net

Additions and Alterations to the
Briggs Residence
20525 Keeny Mill Rd.
Freeland, MD 21053
PROJECT

Wall Section/Framing Plans
TITLE

BMF
DRAWN BY

03.08.99
ISSUE DATE

CONSTRUCTION DOCUMENTS
BID SET

REVISION DATE

DRWG NO. A4